FINELITE

High Performance Recessed 2x4 & 2x2 Drywall Frame Kit Instructions

Step 1 Slide frame pieces onto the bracket.

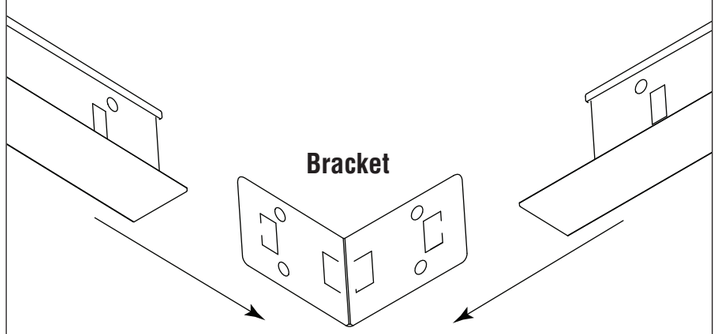

Step 2 Secure by pushing two tabs sightly inward to lock in place.

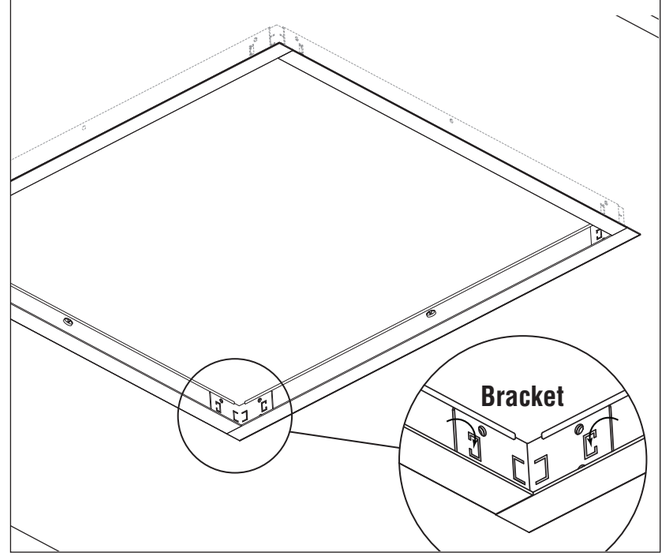

Step 3 Using proper backing and cut out the dimensions as noted below for the 2x4 or 2x2 HPR luminaire. Install drywall frame kit in ceiling.

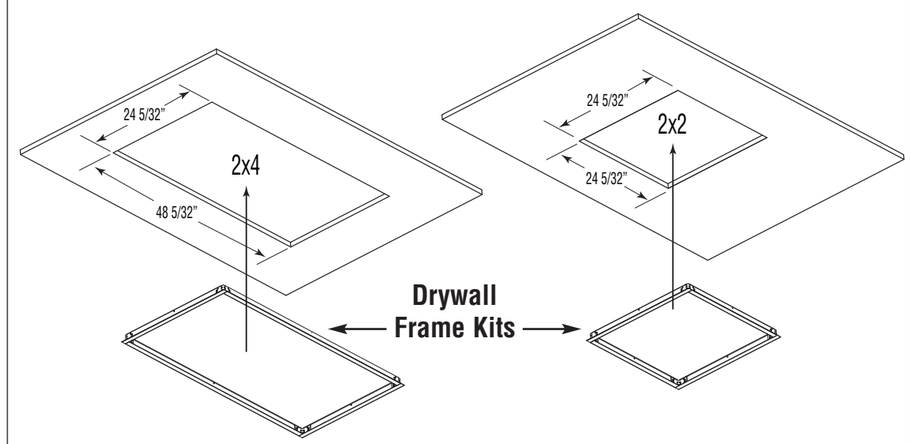

Step 4 Fasten drywall frame kit to backing using a proper fastener through holes in the drywall frame kit.

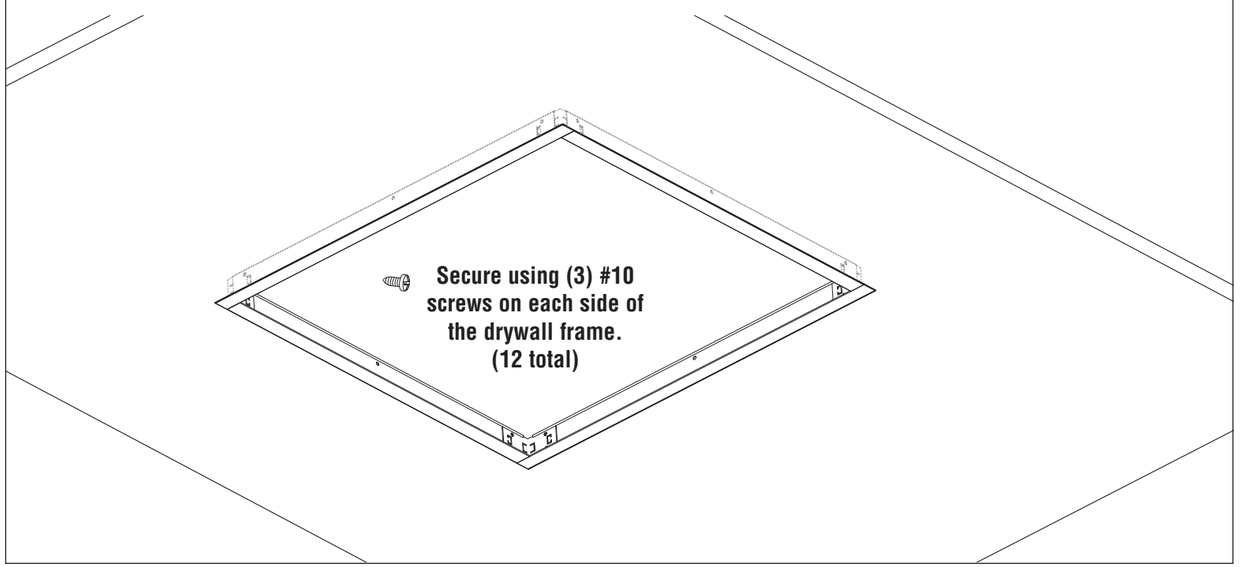

Step 5 Install luminaire - Refer to additional installation instructions.

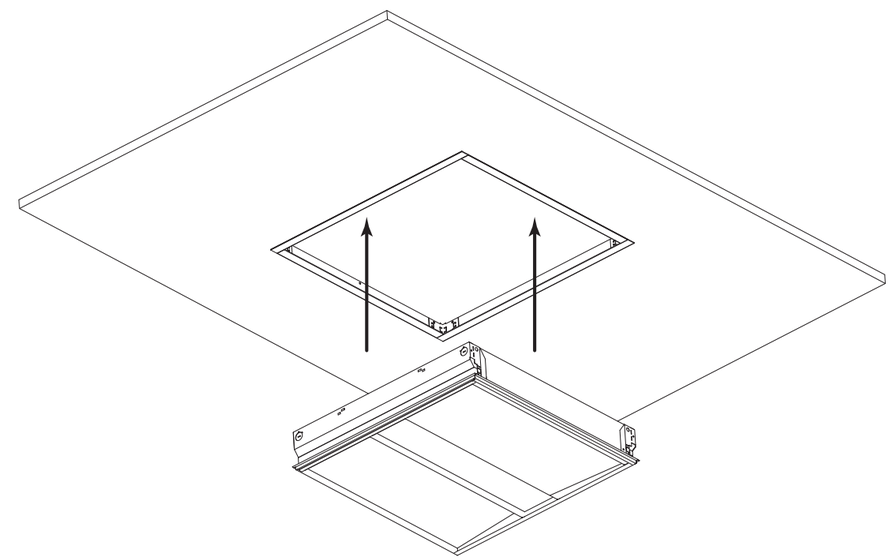

Finelite, Inc. • 30500 Whipple Road • Union City, CA 94587-1530 • 510 / 441-1100 • Fax: 510 / 441-1510 • www.finelite.com

© 2010 FINELITE, INC. ALL RIGHTS RESERVED. Form 98100.06/10