FINELITE®
Better Lighting

Installation Instructions

FineTune™ Controls System

Fine TUNE™
TUNABLE WHITE SYSTEM

Table of Contents

3 System Architecture

4-5 Line Voltage Wiring

6-9 DMX Wiring

10-11 Wall Controller

12 Occupancy Sensors

13 Daylight Sensors

14 List of Components

System Architecture

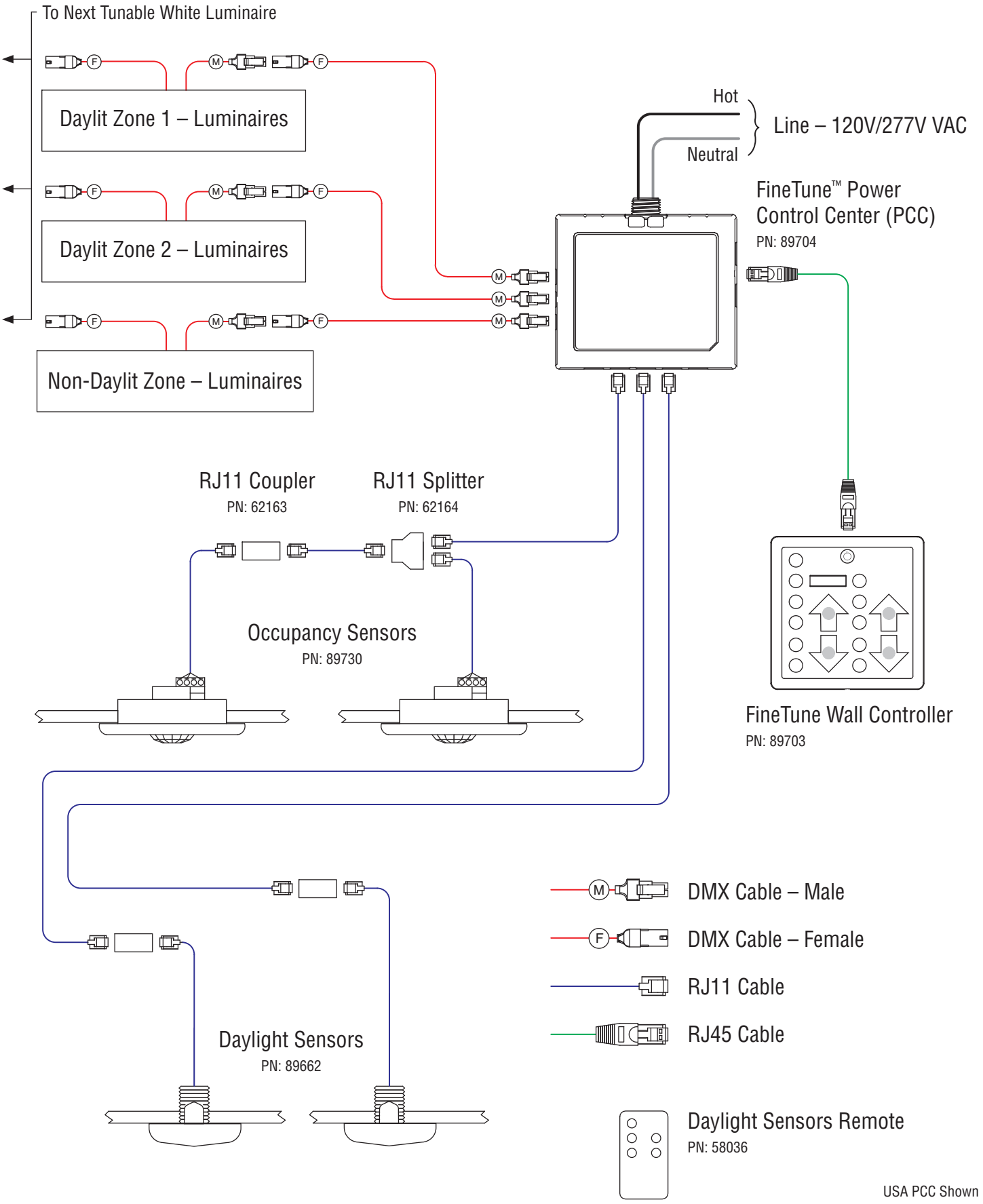

USA PCC Shown

Line Voltage Wiring

CAUTION: TURN CIRCUIT BREAKERS OFF BEFORE WIRING

USA

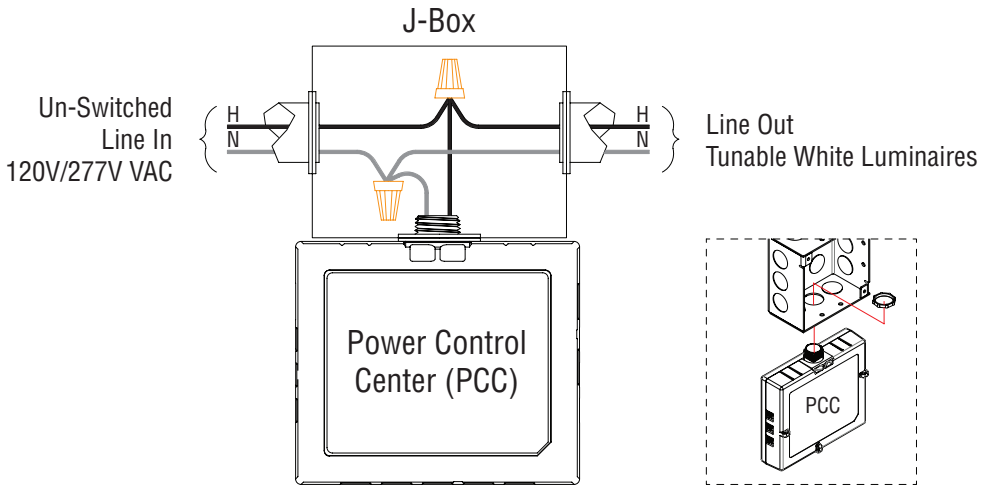

CANADA

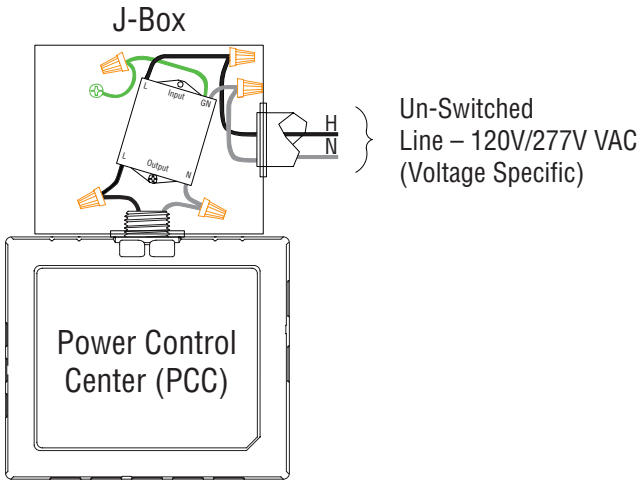

- Provide an un-switched circuit for the FineTune Power Control Center (PCC) and the luminaires.
- The luminaires can be powered off the same un-switched circuit (as shown above) or two separate un-switched circuits can be used depending on PCC mounting location.
- Follow your project's engineering drawings for load requirements of the space, do not exceed circuit amperage and verify circuit voltage before wiring.

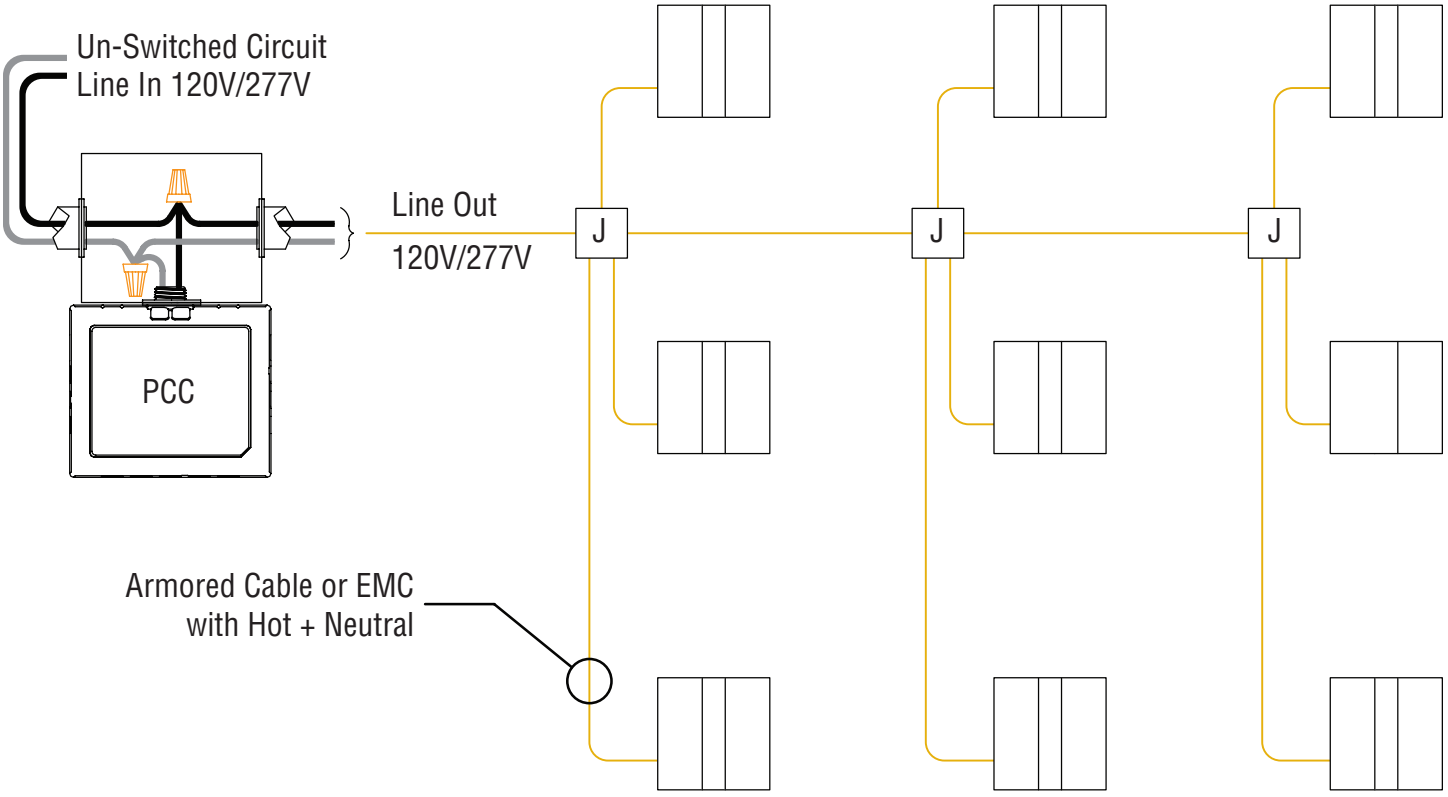

J J-Box

USA PCC Shown

• All luminaires being controlled by the FineTune PCC should be on an un-switched circuit as shown above.

Notes:

• The FineTune PCC is not controlling the line voltage out to the luminaires.

• Luminaires will not power up until DMX cabling is connected and Wall Controller is installed.

DMX Wiring

Once the FineTune™ PCC has been installed and powered, the DMX cables should run to the tunable white luminaires. Two methods are available for DMX wiring and both methods are acceptable.

METHOD 1: When wiring from PCC to luminaires, use FEMALE DMX end to connect to next luminaire.

DMX Cables Starting From FineTune PCC

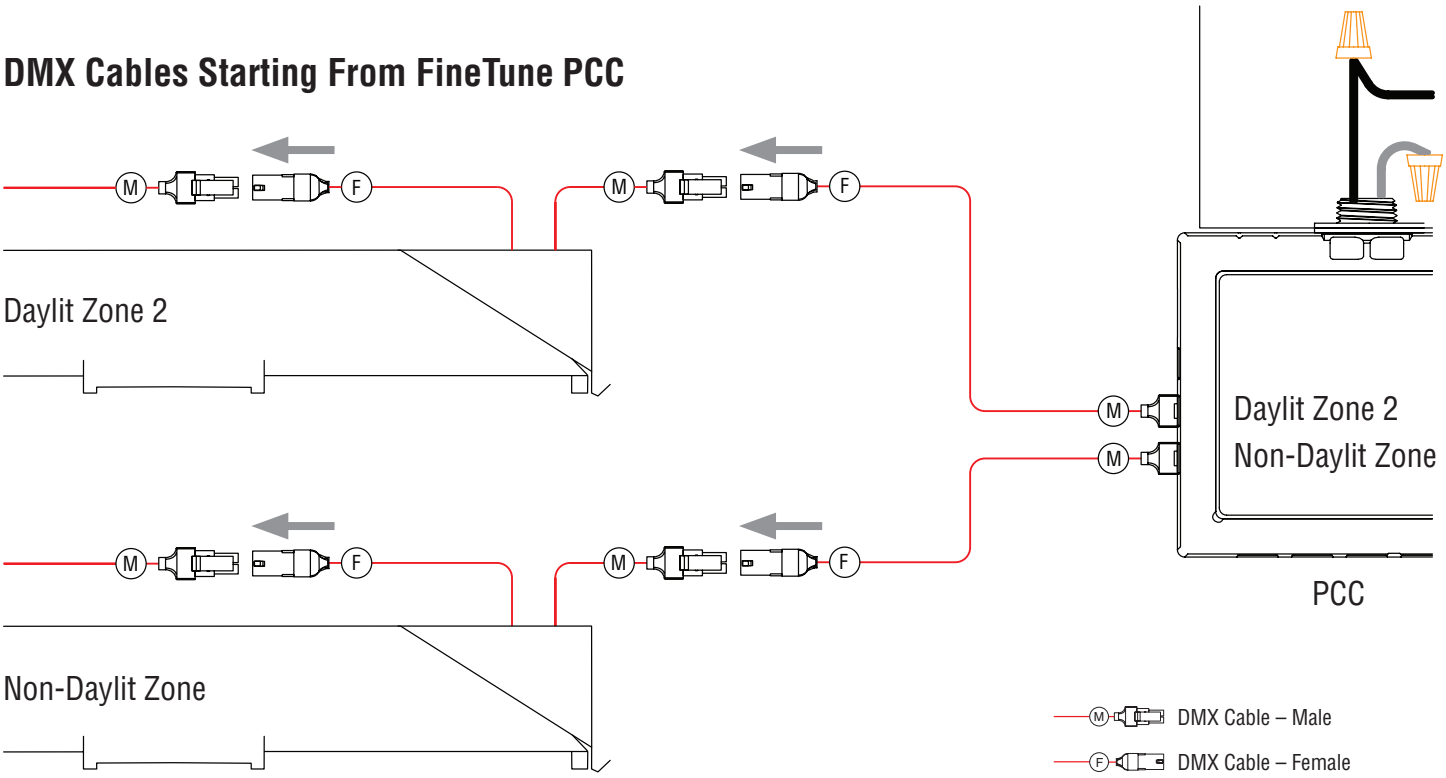

Method 1: Example Wiring

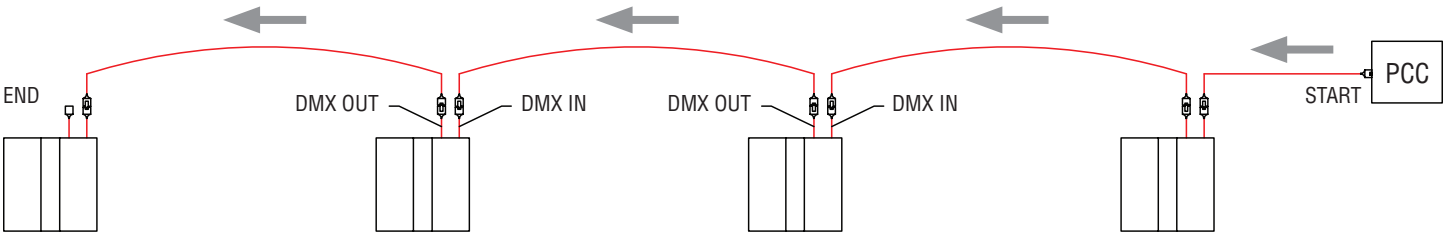

USA PCC Shown

METHOD 1 (RECOMMENDED):

- The drawing above represents starting the DMX cables from the FineTune PCC and wiring outward based on the control zones required.
- Plug the MALE DMX end into the PCC for the control zone you want to group, then lead with the FEMALE DMX end as you go between luminaires in that control zone.

METHOD 2: When wiring from luminaires to PCC, use MALE DMX end to connect to next luminaire.

DMX Cables Starting From The Last Tunable White Luminaire

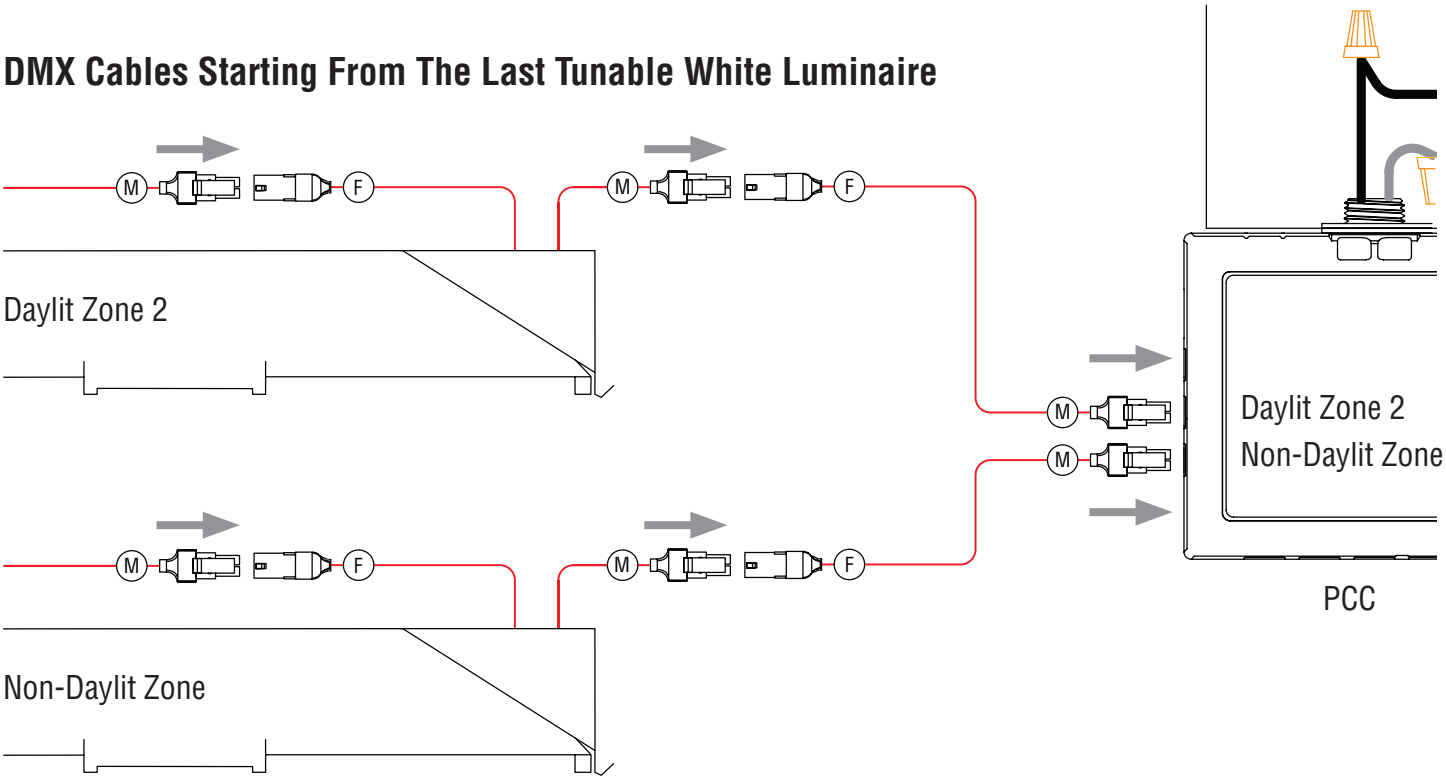

Method 2: Example Wiring

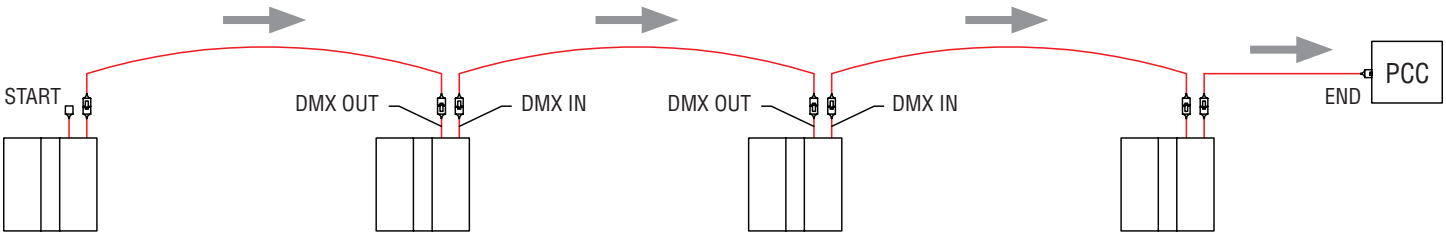

USA PCC Shown

METHOD 2:

- The drawing above represents starting the DMX cable from the last tunable white luminaire in the control zone and wiring toward the FineTune PCC based on the control zones required.
- Lead with the MALE DMX end as you go between luminaires in that control zone.
- Once all luminaires in that control zone are connected together, insert the MALE DMX end into the DMX port for the corresponding control zone.

PCC DMX Wiring Outputs

DMX Outputs

Daylit Zone 1 – Primary Daylit Zone

Automatic daylight dimming.

Daylit Zone 2 – Secondary Daylit Zone

Automatic daylight dimming.

Non-Daylit Zone – General Lighting

Not affected by daylight. Operates based on Wall Controller and Occupancy Sensors (if connected).

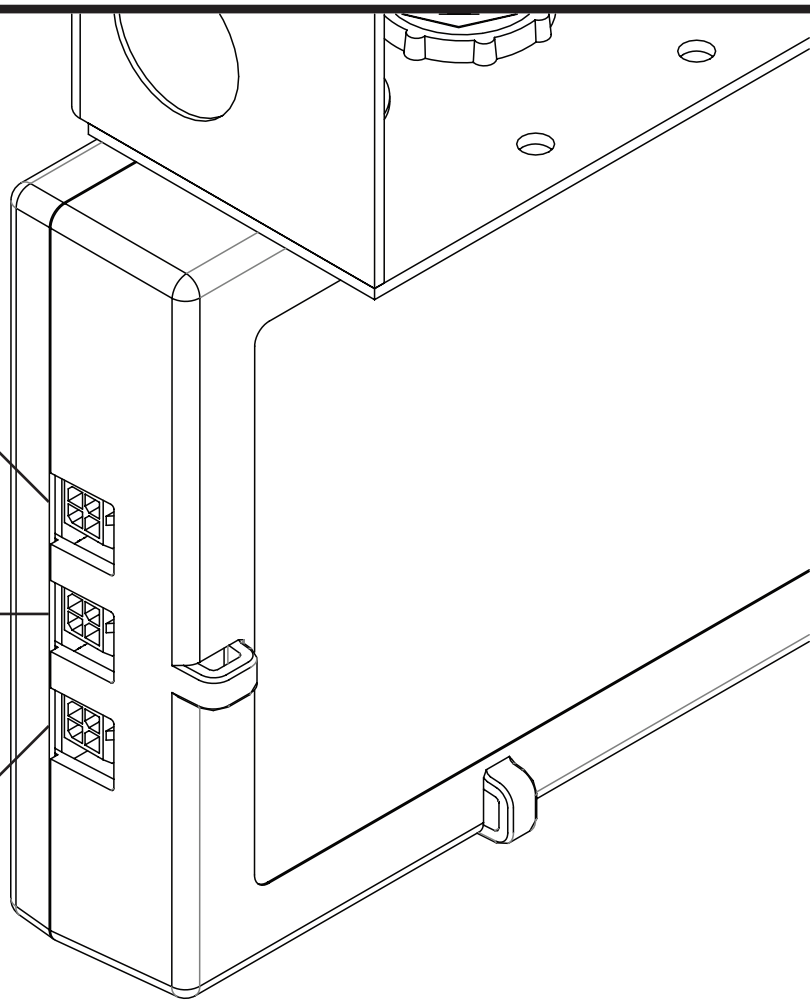

USA PCC Shown

- With FineTune™ DMX drivers there is no limit to how many luminaires can be in a zone. If eldoLED DMX drivers are being used, each DMX output can control a total of 32 drivers before needing a DMX repeater.
- If no daylighting is required for the space, the Daylit Zone 1 & 2 DMX outputs can be used for Non-Daylit Zone purposes, if more than 32 drivers are in that space, and to avoid needing to use a repeater.
- When no Daylight Sensors are connected, the Daylit Zone 1 & 2 DMX outputs act and are controlled like the Non-Daylit Zone.

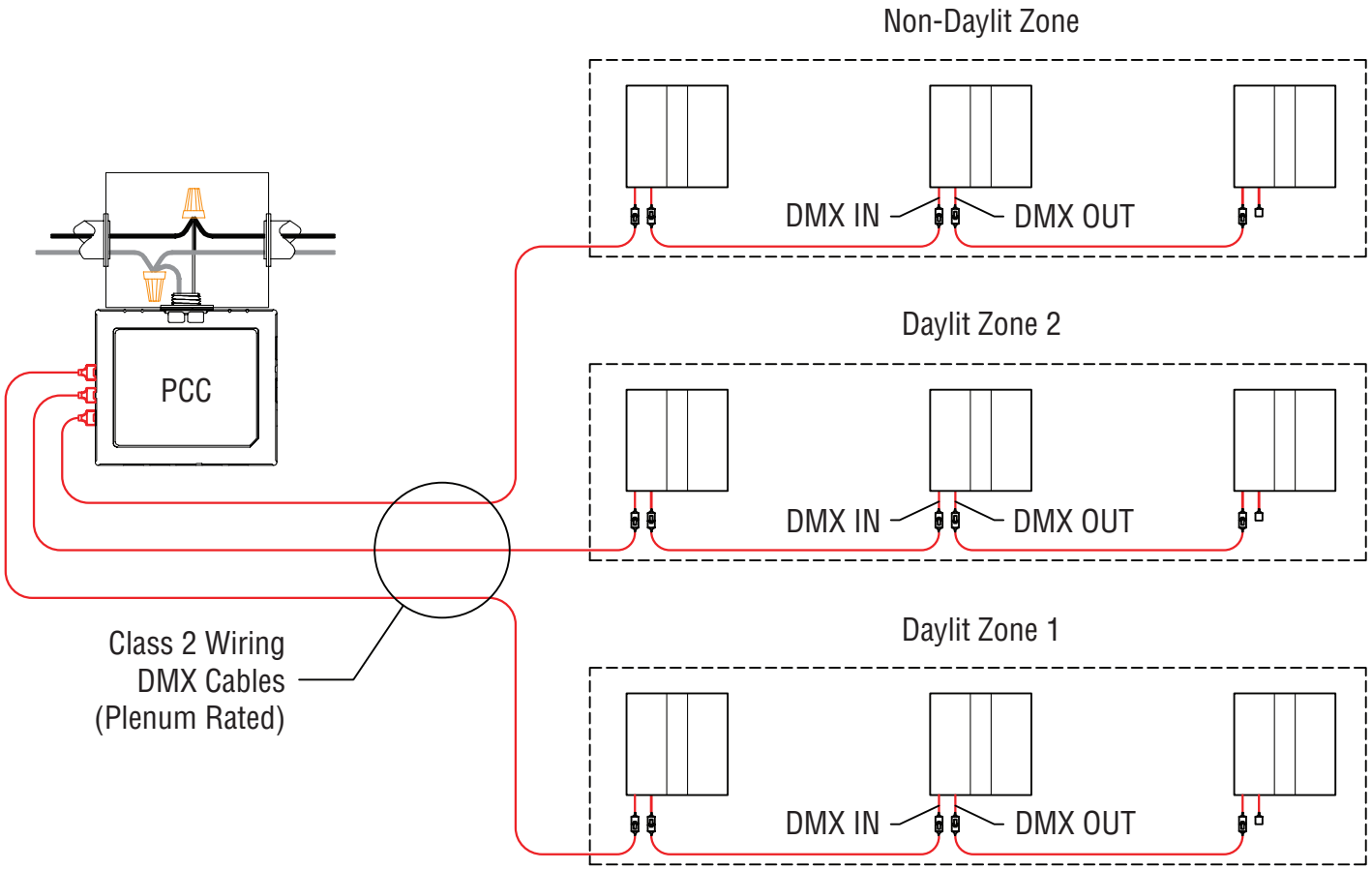

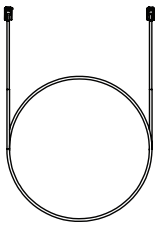

DMX Cable
(Plenum Rated)

- 12 ft.
- 30 ft.
- 50 ft.

USA PCC Shown

- The diagram above represents each DMX output being used based on zone requirements: Daylit Zone 1, Daylit Zone 2, and Non-Daylit Zone.
- Each zone will have a DMX cable coming from the corresponding DMX output from the FineTune PCC to the first luminaire in each zone.
- Additional DMX cable lengths will be needed to daisy chain the luminaires in that zone together.

Wall Controller

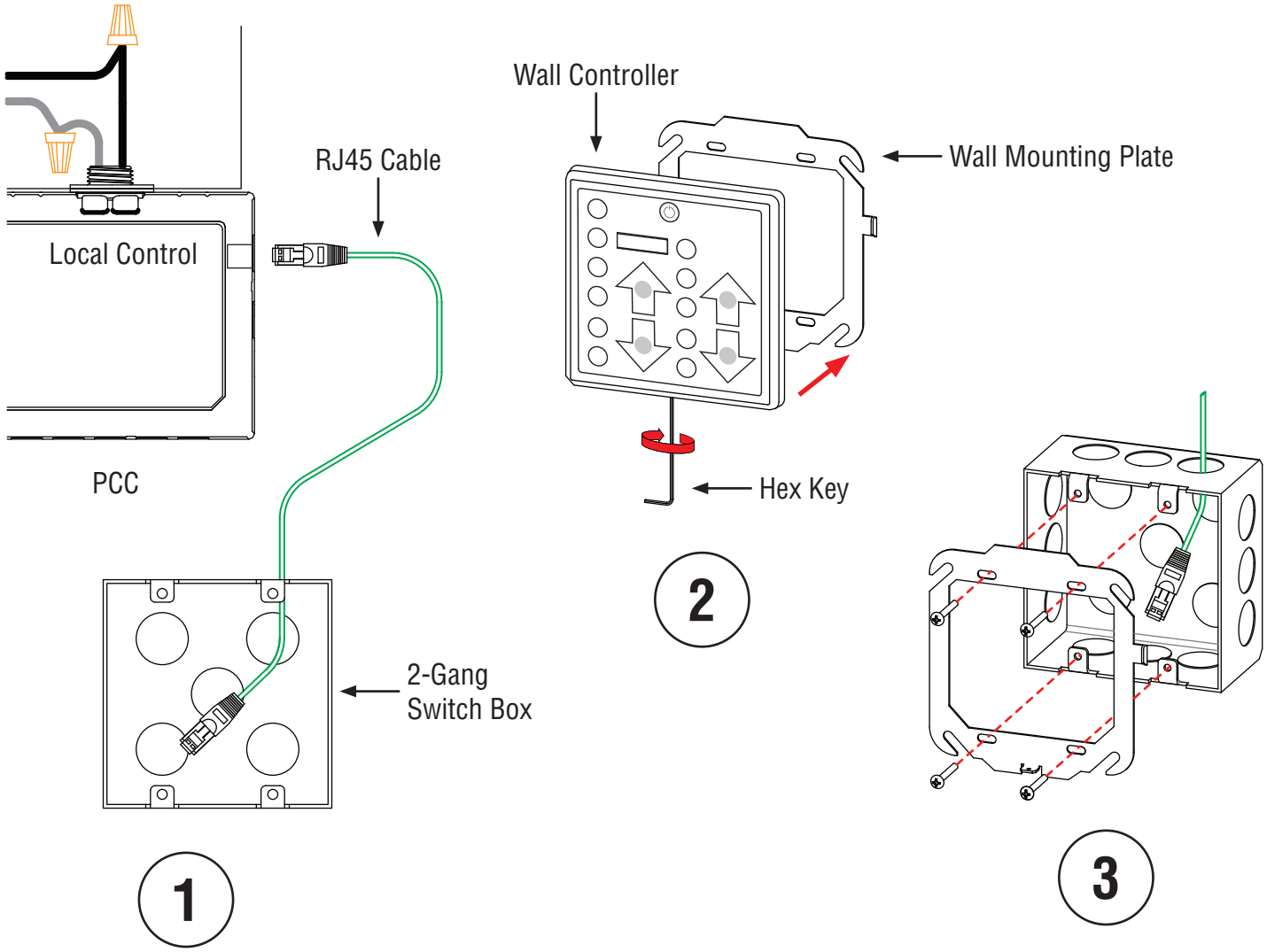

USA PCC Shown

Step 1: Plug RJ45 cable into the “Local Control” port of the PCC. Pull that RJ45 cable down through the wall to a 2-gang switch box installed where the Wall Controller will be placed. Leave about 6 inches of RJ45 in the switch box.

Step 2: Using the provided hex key, loosen the hex set screw at the bottom of the Wall Controller and remove the wall mounting plate.

Step 3: Install the wall mounting plate onto the 2-gang switch box.

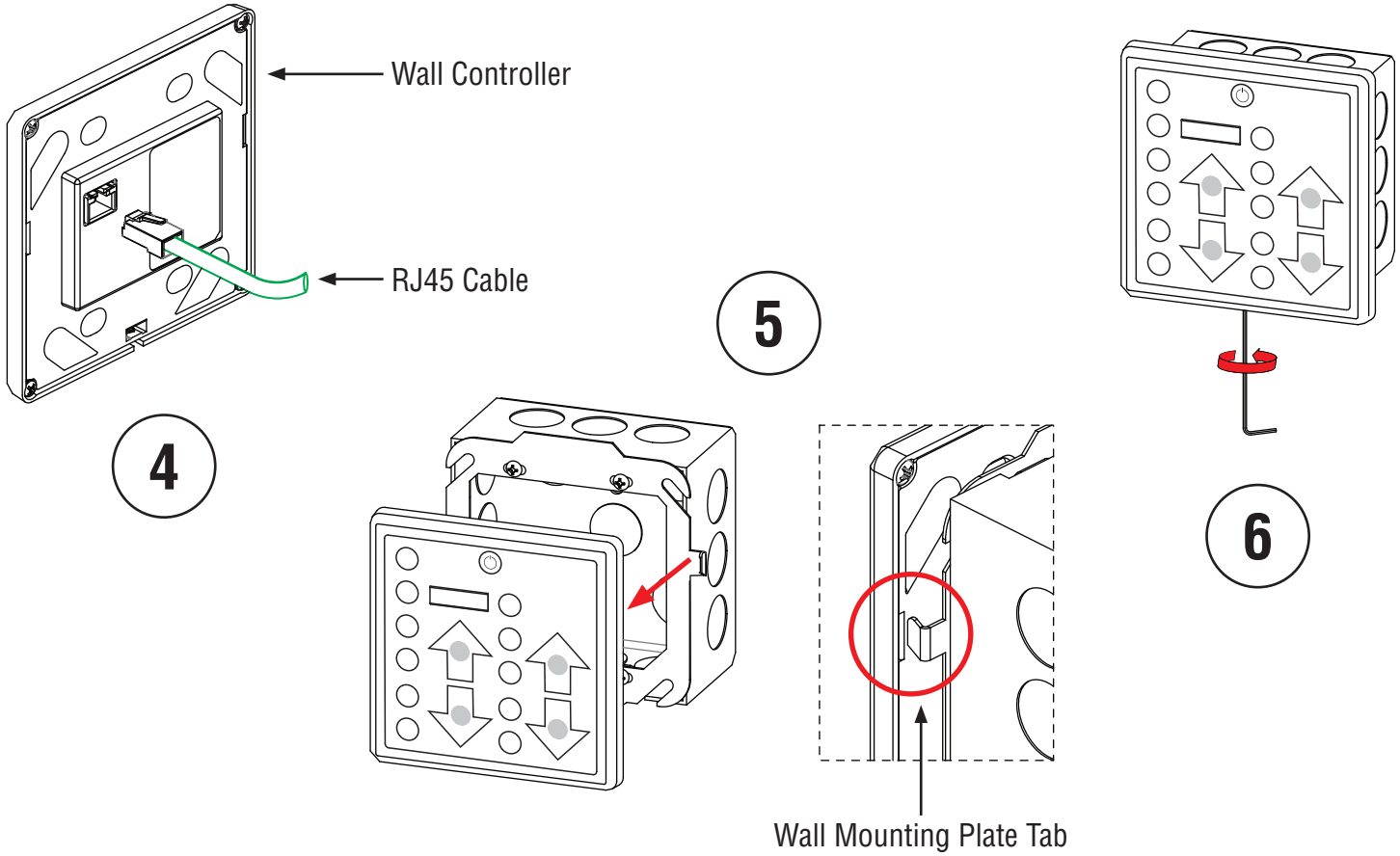

Step 4: Plug the RJ45 cable from the 2-gang switch box into the back of the Wall Controller.

Note: Use the Wall Controller to test luminaire presets and functionality before you proceed to Steps 5 & 6.

Step 5: Slide the wall mounting plate tabs into the sides of the back side of the Wall Controller.

Step 6: Using the hex key again, tighten the hex set screw to secure the Wall Controller.

Occupancy Sensors

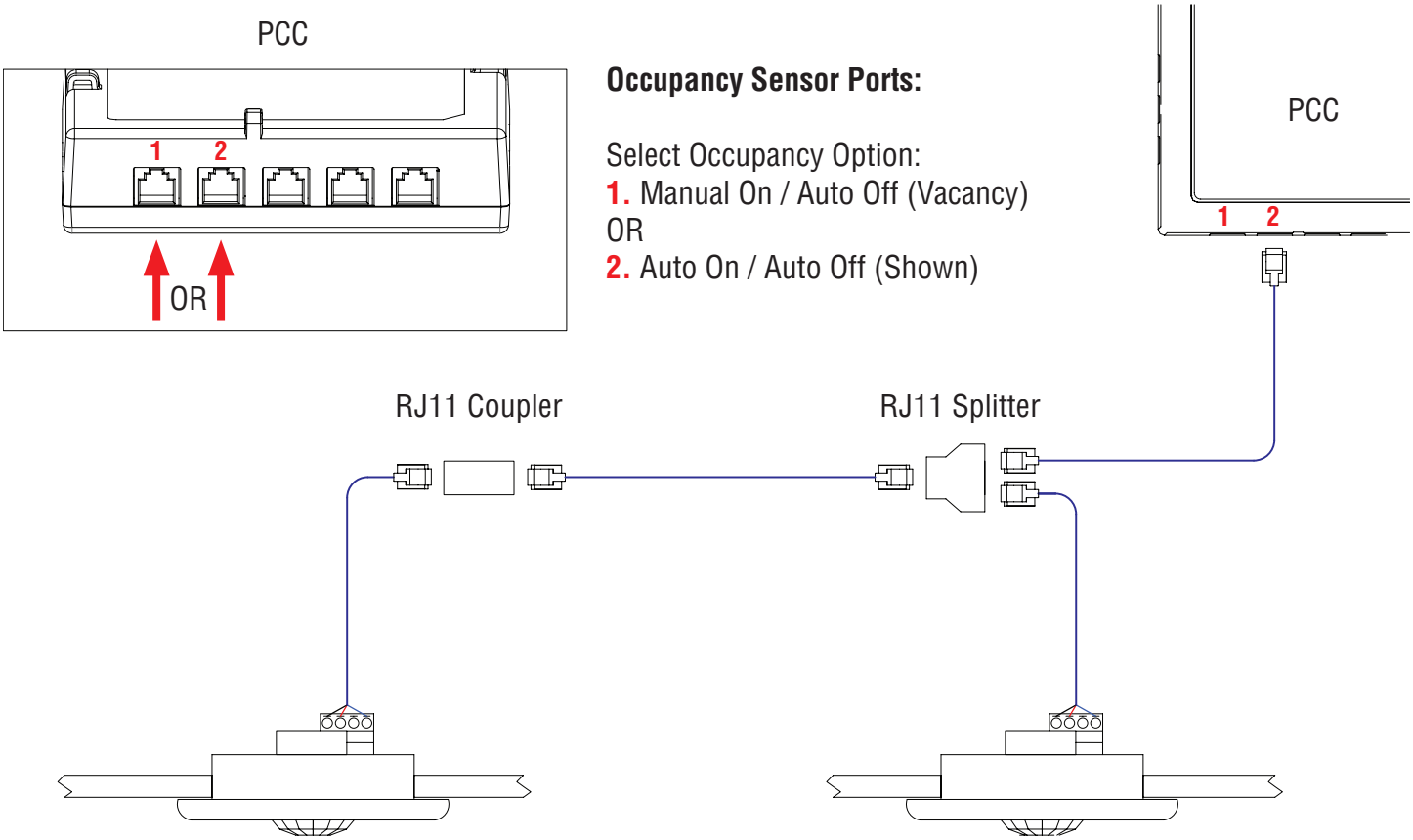

- Install Occupancy Sensor(s) (up to two) in the build space, if required. See manufacturer's installation instruction for mounting details, time delays, coverage patterns etc.

- Choose the occupancy functionality by plugging the RJ11 into one of the options listed above and indicated on the PCC.

- Use a RJ11 coupler to connect the RJ11 cable from the PCC to the RJ11 coming from the Occupancy Sensor. If two Occupancy Sensors are needed use an RJ11 Splitter.

Daylight Sensors

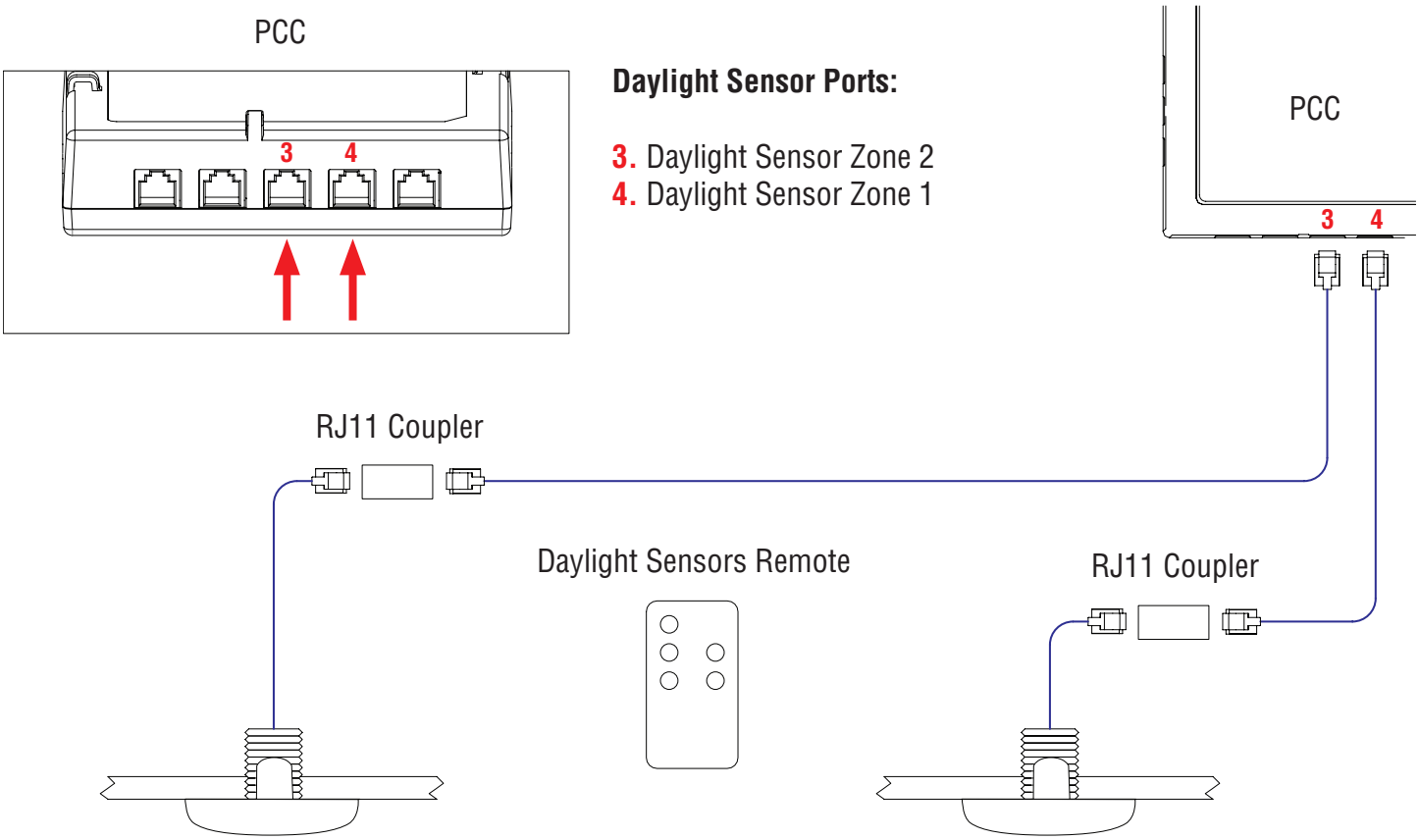

- Install one Daylight Sensor per daylit zone, in the build space, if required. See manufacturer's installation instruction for mounting details and automatic daylighting set up.
- Plug a RJ11 cable into a Daylight Sensor port, options are listed above and indicated on the PCC.
- Use a RJ11 coupler to connect the RJ11 cable from the PCC to the RJ11 coming from the Daylight Sensor.

List of Components

FineTune™ Driver

- PN: 89661 — Finelite DMX Driver, 120V/277V VAC 50-60 Hz, 40W

FineTune Controls System

- PN: 89703 — Wall Controller, White Nylon
- USA PN: 89704 — Power Control Center, Plenum Rated, 120V/277V VAC, 60 Hz
- CANADA PN: 89772 — Power Control Center, Plenum Rated, 120V VAC, 60 Hz
- CANADA PN: 89773 — Power Control Center, Plenum Rated, 277V VAC, 60 Hz

DMX Cables

- PN: 89648 — 50' DMX Cable, Plenum Rated
- PN: 89647 — 30' DMX Cable, Plenum Rated
- PN: 89646 — 12' DMX Cable, Plenum Rated

RJ45 Cables

- PN: 58100 — 50' RJ45 Cable, Plenum Rated
- PN: 58106 — 25' RJ45 Cable, Plenum Rated
- PN: 58466 — RJ45 Splitter
- PN: 58462 — RJ45 Coupler

RJ11 Cables & Connectors

- PN: 89652 — 50' RJ11 Cable, Plenum Rated
- PN: 89651 — 30' RJ11 Cable, Plenum Rated
- PN: 62164 — RJ11 Splitter
- PN: 62163 — RJ11 Coupler

Occupancy & Daylight Sensor

- PN: 89730 — Occupancy Sensor – Dual Technology
- PN: 89705 — Wall Mount Occupancy Sensor – Dual Technology
- PN: 89662 — Daylight Sensor – Closed Loop
- PN: 58036 — Daylight Sensor Remote (One Per Project)

